# ECE3120: Computer Systems
# Chapter 7: Interfacing I/O Devices
# Lab-Class

Manjeera Jeedigunta

http://blogs.cae.tntech.edu/msjeedigun21

Email: msjeedigun21@tntech.edu

Tel: 931-372-6181, Prescott Hall 120

# Today

- Interfacing with LEDs
- Interfacing with Seven-Segment Display
- Time-Multiplexing
- Interfacing with Keypad
- Debouncing

**Example 1:** Use Port B to drive eight LEDs using the circuit shown in Figure 7.30. Use the LEDs to display the value of a counter counting from1 to 255 each LED lighting up for 1ms.

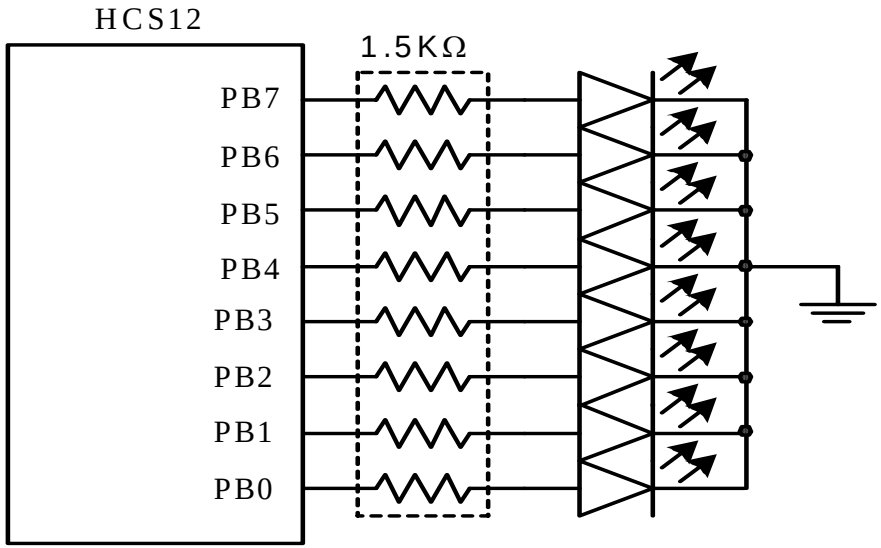


Figure 7.30 Circuit connection for example 7.3

Set DDRB for O/P, i/e , DDRB=1

Enable LEDs, Pin 1 of Port J =0

for i=1 to 255

PTA=i

end

The assembly program that performs the operation is as follows: **File1.asm**

```
        #include  "hcs12.inc"
        org       $1000
led_c   dc.b      $FF                    ;intial value in the counter
temp    dc.b      $1
        org       $1500
        movb      #$FF,DDRB        ; configure port B for output
        bset      DDRJ,$02         ; configure PJ1 pin for output
        bclr      PTJ,$02                ; enable LEDs to light
forever ldaa      led_c                  ; load a with counter
led_lp  staa      temp
        movb      temp,PTB         ; turn on one LED
        ldy       #5                     ; wait for 1ms second
        jsr       delayby100ms     ;           "
        dbne      a,led_lp         ; reach the end of the table yet?
        bra       forever                ; start from beginning
        swi
        #include  "delay.asm"
        end
```

# Just LEDs –Example 2

- Disable the seven segment display if you need to work with LEDs alone
  - movb #$FF,DDRP ;configuring the digit select port for o/p
  - movb #$FF,PTP ;disablilng the digits
- Adding these two instructions to your previous code does this.
- Try **File1a.asm**

# Light up even numbered LEDs File2.asm- Example 3

```
            #include   "hcs12.inc"
            org        $1000
led_tab     dc.b       $01,$04,$10,$40        ;intial value in the counter

            org        $1500
            movb       #$FF,DDRB              ; configure port B for output
            bset       DDRJ,$02               ; configure PJ1 pin for output
            bclr       PTJ,$02                ; enable LEDs to light
            movb       #$FF,DDRP              ;configure Port P for O/P
            movb       #$FF,PTP               ;Disable the Digits
forever     ldaa       #4                     ;initialize the counter
            ldx        #led_tab               ; load a with counter
led_lp      movb       1,x+,PORTB             ; turn on one LED
            ldy        #5                     ; wait for 1ms second
            jsr        delayby100ms           ;                  "
            dbne       a,led_lp               ; reach the end of the table yet?
            bra        forever                ; start from beginning
            swi
            #include   "delay.asm"
            end
```

# Driving a Seven-Segment Display

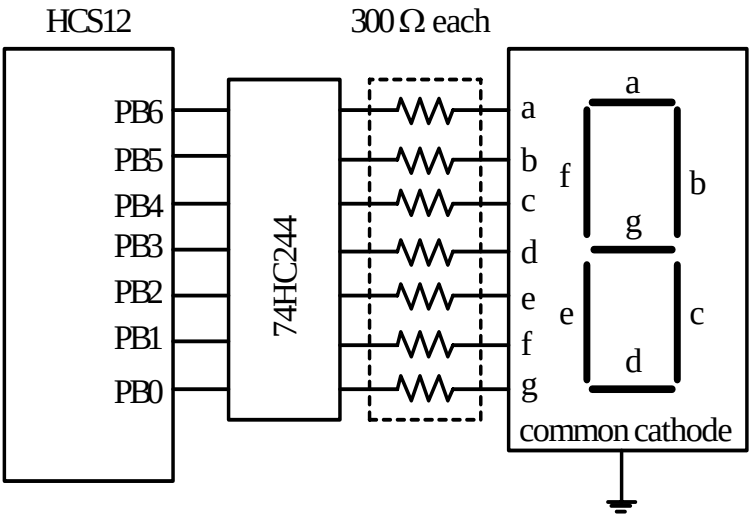


Figure 7.31 Driving a single seven-segment display

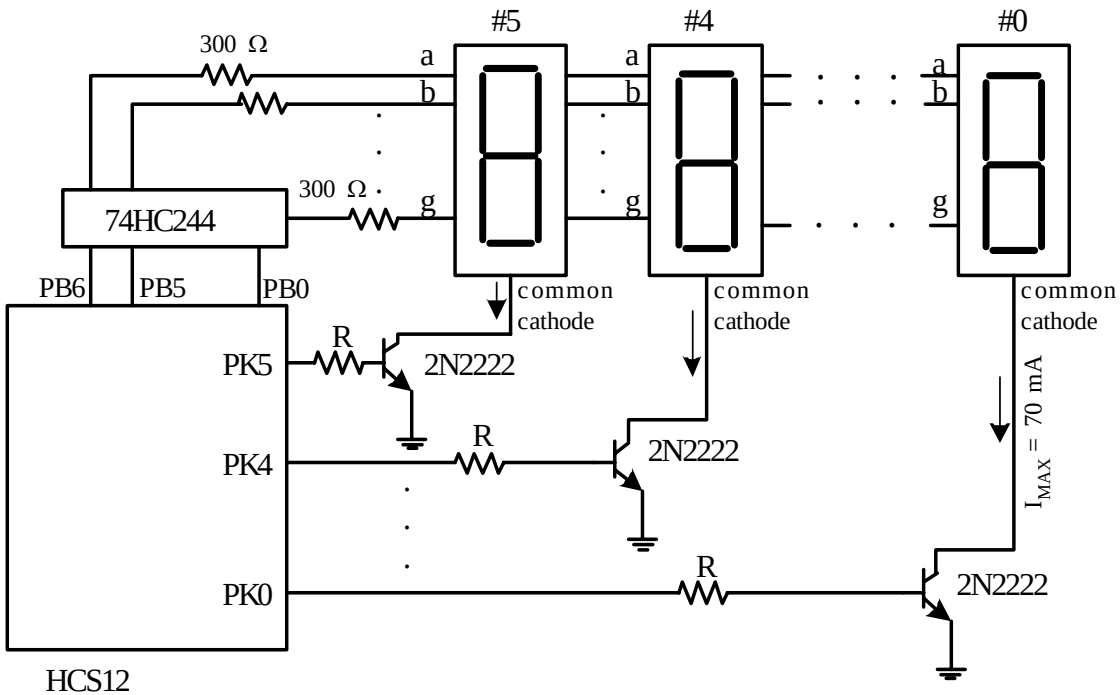


Figure 7.32 Port B and Port K together drive six seven-segment displays (MC9S12DP256)

Table 7.5 BCD to seven-segment decoder

| BCD digit | Segments a | b | c | d | e | f | g | Corresponding Hex Number |
|---|---|---|---|---|---|---|---|---|
| 0 | 1 | 1 | 1 | 1 | 1 | 1 | 0 | $7E |
| 1 | 0 | 1 | 1 | 0 | 0 | 0 | 0 | $30 |
| 2 | 1 | 1 | 0 | 1 | 1 | 0 | 1 | $6D |
| 3 | 1 | 1 | 1 | 1 | 0 | 0 | 1 | $79 |
| 4 | 0 | 1 | 1 | 0 | 0 | 1 | 1 | $33 |
| 5 | 1 | 0 | 1 | 1 | 0 | 1 | 1 | $5B |
| 6 | 1 | 0 | 1 | 1 | 1 | 1 | 1 | $5F |
| 7 | 1 | 1 | 1 | 0 | 0 | 0 | 0 | $70 |
| 8 | 1 | 1 | 1 | 1 | 1 | 1 | 1 | $7F |
| 9 | 1 | 1 | 1 | 1 | 0 | 1 | 1 | $7B |

# Driving a Seven-Segment Displa

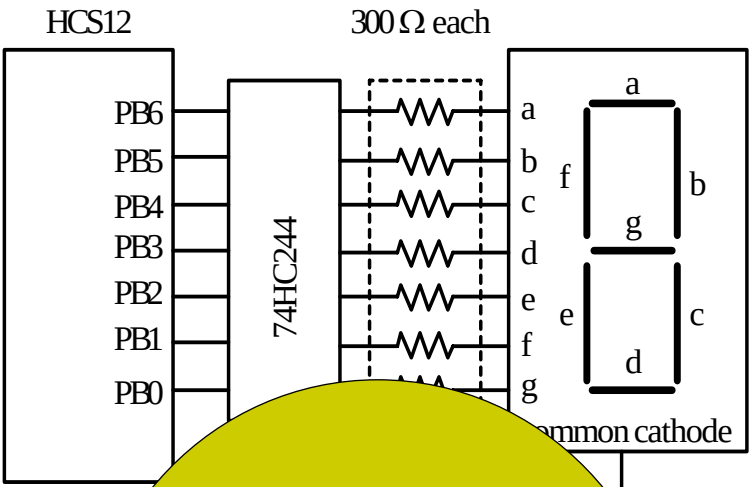


Figur

lay

T

| | | | | | | | |
|---|---|---|---|---|---|---|---|
| 0 | | | | | | | |
| 1 | | | | | | | 0 |
| 2 | | | | | | | $6D |
| 3 | 1 | 1 | | | | | $79 |
| 4 | 0 | 1 | 1 | | 1 | 1 | $33 |
| 5 | 1 | 0 | 1 | | 1 | 1 | $5B |
| 6 | 1 | 0 | 1 | 1 | 1 | 1 | $5F |
| 7 | 1 | 1 | 1 | 0 | 0 | 0 | $70 |
| 8 | 1 | 1 | 1 | 1 | 1 | 1 | $7F |
| 9 | 1 | 1 | 1 | 1 | 0 | 1 | $7B |

This table is fine if the Port B pins were wired to the segments in the same way..
But guess what??
They are not!!

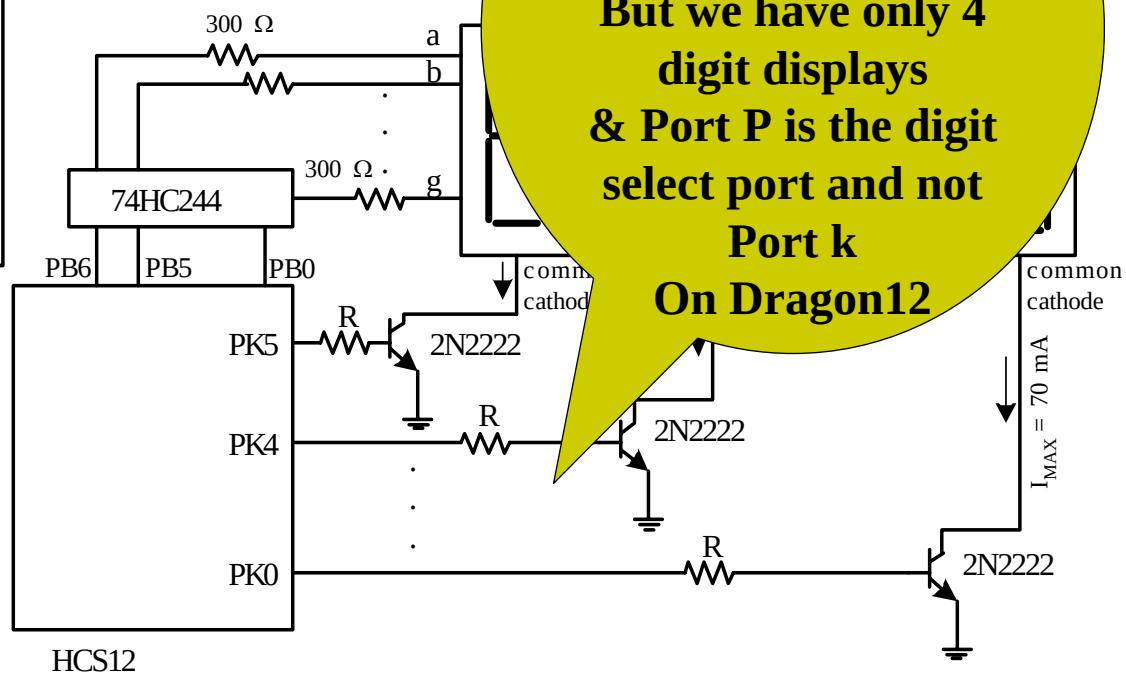


Figure 7.32 Port B and Port K together drive six seven-segment displays (MC9S12DP256)

**Works great with that kind of circuit**
**But we have only 4 digit displays**
**& Port P is the digit select port and not Port k**
**On Dragon12**

# Driving the seven segment display in our case

- Port B = used to display the pattern
  - Should be configured for the o/p
- Port P = used to select the digit for display
  - P3=D0,P2=D1,P1=D2,P0=D3
  - Port P should first be configured for output
  - One digit should be enabled for display
    - Set it to 0
  - The other 3 digits should be disabled
    - Set them to 1

# Driving the seven segment display in our case

- Port B = used to display the pattern
  - Should be configured for the o/p
- Port P = used to select the digit for display
  - P3=D0,P2=D1,P1=D2,P0=D3
  - Port P should first be configured for output
  - One digit should be enabled for display
    - Set it to 0
  - The oth
    - 

**Make sure you take down the circuit for our case!! And also take note of the new table of values for patterns and digit selects**

- **Example 4:** Write a sequence of instructions to display 0 on the seven-segment display **#2** in Figure 1. **File3.asm**
- **Solution:** To display the digit 0 on the display #2, we need to:
  - Output the hex value $3F to port B
  - Set the PP1 pin to 0
  - Clear pins PP3, PP2, PP0 to 1

```
        #include "hcs12.inc"
        org     $1000
four    equ     $33                     ; seven-segment pattern of digit 0
        org     $1500
        movb    #$0F,DDRP  ; configure PORT P for output
        movb    #$FF,DDRB  ; configure PORT B for output
        bset    PTP,$0D     ;disable  the remaining digits by setting the digits to 1
        bclr    PTP,$02     ;enable  the required digit by setting it to 0
        movb    #$3f,PTB   ; output the seven-segment pattern to PORTB
        swi
        end
```

Now try displaying the same number on the other digits ONE AT A TIME

- **Example 4** Write a program to display 1234 on the six seven-segment displays shown in Figure 1. **File4.asm**
- **Solution:** Display 1234 on display #3, #2, #1, #0, respectively.
- The values to be output to Port B and Port P to display one digit at a time is shown in Table

| Seven-Segment | Displayed BCD Digit | Port B | PortP |
|---|---|---|---|
| #3 | 1 | $06 | $0E |
| #2 | 2 | $5B | $0D |
| #1 | 3 | $4F | $0B |
| #0 | 4 | $66 | $07 |

Try **File5.asm** for a different pattern

Also try increasing the delay to 1 sec

```
                #include   "hcs12.inc"
                org        $1000
pat_port        equ        PORTB          ; Port that drives the segment pattern
pat_dir         equ        DDRB           ; direction register of the segment pattern
sel_port        equ        PTP            ; Port that selects the digit
sel_dir         equ        DDRP           ; data direction register of the digit select port
                org        $1500
                movb       #$FF,pat_dir   ; configure pattern port for output
                movb       #$0F,sel_dir   ; configure digit select port for output
forever         ldx        #disp_tab      ; use X as the pointer
loop            movb       1,x+,pat_port  ; output digit pattern and move the pointer
                movb       1,x+,sel_port  ; output digit select value and move the pointer
                ldy        #1             ; wait for 1 ms
                jsr        delayby1ms     ;          "
                cpx        #disp_tab+12   ; reach the end of the table
                bne        loop
                bra        forever
                swi
                #include   "delay.asm"
disp_tab        dc.b       $06,$0E        ; seven-segment display table Digit 3 (1110)
                dc.b       $5b,$0D        ;Digit2 (1101)
                dc.b       $4f,$0B        ;Digit1 (1011)
                dc.b       $66,$07        ;Digit0 (0111)
                end
```

# Time Multiplexing

Try
File8.asm
&
File9.asm

- If Refresh Rate is 50 hz
- Total Time period = 1/50=20ms
- # of things to multiplex (leds, digits etc) = say 5
- Time for each thing= Total period/# of things=4ms

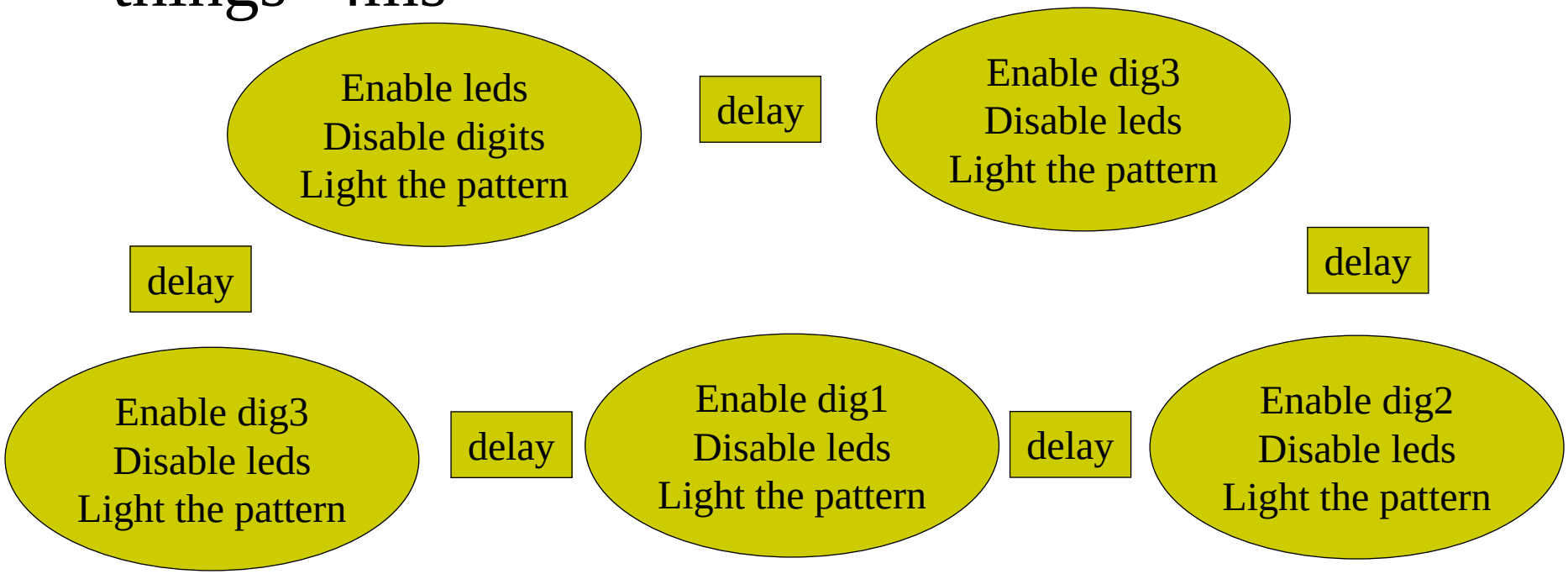

# Keypad Input Process

- A keyboard input is divided into three steps:
- Scan the keyboard to discover which key has been pressed
- Debounce the keyboard to determine if a key is indeed pressed. Both hardware and software approaches for key debouncing are available.
- Lookup the ASCII table to find out the ASCII code of the pressed key.

# Keypad Scanning

- PA7~PA4 → O/P, Row selection, row being [(0,1,2,3),(4,5,6,7)..]
- Row being scanned is driven low→ either one of PA7~PA4=0
- PA3~PA0→I/P, Decide which key is pressed
  - Initially High , when pressed the corr row and column will be shorted
  - When pressed the corresponding PA Pin would be low

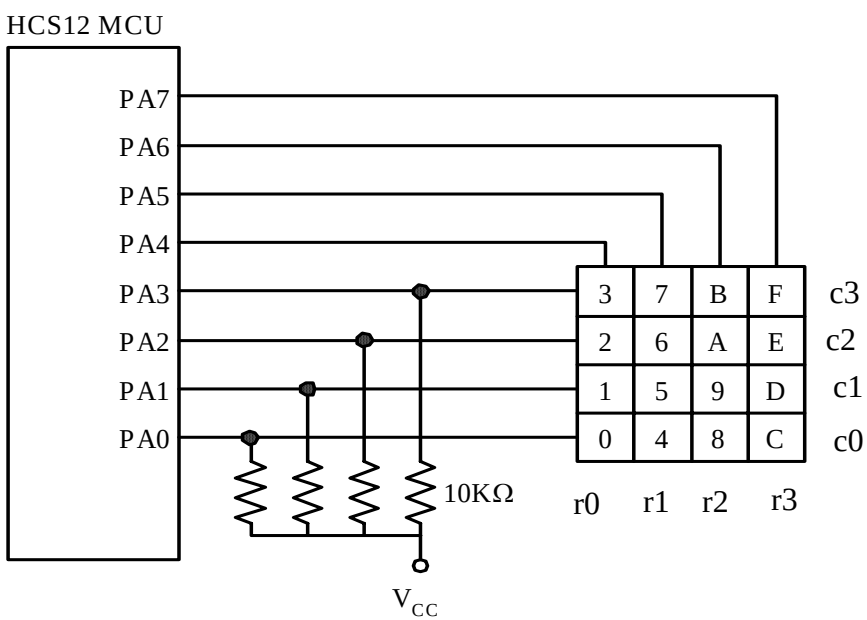


Figure 7.41 Sixteen-key keypad connected to the HCS12

| PA7 | PA6 | PA5 | PA4 | Selected keys |
|---|---|---|---|---|
| 1 | 1 | 1 | 0 | 0, 1, 2, and 3 |
| 1 | 1 | 0 | 1 | 4, 5, 6, and 7 |
| 1 | 0 | 1 | 1 | 8, 9, A, and B |
| 0 | 1 | 1 | 1 | C, D, E, and F |

Table 7.16 Sixteen-key keypad row selections

- Example 5 Write a program to perform keypad scanning, debouncing, and returns the ASCII code in accumulator A to the caller. **File6.asm**
- Solution
  - Pins PA4..PA7 each control one row of four keys.
  - Scanning is performed by setting one of the PA7…PA4 pins to low, the other three pins to high and testing one key at a time.

```
#include   "c:\miniide\hcs12.inc"
keyboard equ     PTA

get_char  movb   #$F0,DDRA            ; set PA7~PA4 for output, PA3~PA0 for input
scan_r0   movb   #$EF,keyboard        ; scan the row containing keys 0123
scan_k0   brclr  keyboard,$01,key0    ; is key 0 pressed?
scan_k1   brclr  keyboard,$02,key1    ; is key 1 pressed?
scan_k2   brclr  keyboard,$04,key2    ; is key 2 pressed?
scan_k3   brclr  keyboard,$08,key3    ; is key 3 pressed?
          bra    scan_r1
key0      jmp    db_key0
key1      jmp    db_key1
```

```
key2      jmp     db_key2
key3      jmp     db_key3
scan_r1   movb    #$DF,keyboard       ; scan the row containing keys 4567
scan_k4   brclr   keyboard,$01,key4   ; is key 4 pressed?
scan_k5   brclr   keyboard,$02,key5   ; is key 5 pressed?
scan_k6   brclr   keyboard,$04,key6   ; is key 6 pressed?
scan_k7   brclr   keyboard,$08,key7   ; is key 7 pressed?
          bra     scan_r2
key4      jmp     db_key4
key5      jmp     db_key5
key6      jmp     db_key6
key7      jmp     db_key7
scan_r2   movb    #$BF,keyboard       ; scan the row containing keys 89AB
          bclr    keyboard,$40        ;  “
scan_k8   brclr   keyboard,$01,key8   ; is key 8 pressed?
scan_k9   brclr   keyboard,$02,key9   ; is key 9 pressed?
scan_kA   brclr   keyboard,$04,keyA   ; is key A pressed?
scan_kB   brclr   keyboard,$08,keyB   ; is key B pressed?
          bra     scan_r3
key8      jmp     db_key8
key9      jmp     db_key9
```

```
keyA      jmp     db_keyA
keyB      jmp     db_keyB
scan_r3   movb    #$7F,keyboard       ; scan the row containing keys CDEF
scan_kC   brclr   keyboard,$01,keyC   ; is key C pressed?
scan_kD   brclr   keyboard,$02,keyD   ; is key D pressed?
scan_kE   brclr   keyboard,$04,keyE   ; is key E pressed?
scan_kF   brclr   keyboard,$08,keyF   ; is key F pressed?
          jmp     scan_r0
keyC      jmp     db_keyC
keyD      jmp     db_keyD
keyE      jmp     db_keyE
keyF      jmp     db_keyF
; debounce key 0
db_key0   jsr     delay10ms
          brclr   keyboard,$01,getc0
          jmp     scan_k1
getc0     ldaa    #$30                ; return the ASCII code of 0
          rts
; debounce key 1
```

```
db_key1  jsr     delay10ms
         brclr   keyboard,$02,getc1
         jmp     scan_k2
getc1    ldaa    #$31                ; return the ASCII code of 1
         rts
db_key2  jsr     delay10ms
         brclr   keyboard,$04,getc2
         jmp     scan_k3
getc2    ldaa    #$32                ; return the ASCII code of 2
         rts
db_key3  jsr     delay10ms
         brclr   keyboard,$08,getc3
         jmp     scan_r1
getc3    ldaa    #$33                ; return the ASCII code of 3
         rts
db_key4  jsr     delay10ms
         brclr   keyboard,$01,getc4
```

```
        jmp     scan_k5
getc4   ldaa    #$34            ; return the ASCII code of 4
        rts
db_key5 jsr     delay10ms
        brclr   keyboard,$02,getc5
        jmp     scan_k6
getc5   ldaa    #$35            ; return the ASCII code of 5
        rts
db_key6 jsr     delay10ms
        brclr   keyboard,$04,getc6
        jmp     scan_k7
getc6   ldaa    #$36            ; return the ASCII code of 6
        rts
db_key7 jsr     delay10ms
        brclr   keyboard,$08,getc7
        jmp     scan_r2
```

```
getc7     ldaa    #$37                ; return the ASCII code of 7
          rts
db_key8   jsr     delay10ms
          brclr   keyboard,$01,getc8
          jmp     scan_k9
getc8     ldaa    #$38                ; return the ASCII code of 8
          rts
db_key9   jsr     delay10ms
          brclr   keyboard,$02,getc9
          jmp     scan_kA
getc9     ldaa    #$39                ; return the ASCII code of 9
          rts
db_keyA   jsr     delay10ms
          brclr   keyboard,$04,getcA
          jmp     scan_kB
getcA     ldaa    #$41                ; get the ASCII code of A
          rts
db_keyB   jsr     delay10ms
          brclr   keyboard,$08,getcB
          jmp     scan_r3
getcB     ldaa    #$42                ; get the ASCII code of B
          rts
```

```
db_keyC   jsr     delay10ms
          brclr   keyboard,$01,getcC
          jmp     scan_kD
getcC     ldaa    #$43                ; get the ASCII code of C
          rts
db_keyD   jsr     delay10ms
          brclr   keyboard,$02,getcD
          jmp     scan_kE
getcD     ldaa    #$44                ; get the ASCII code of D
          rts
db_keyE   jsr     delay10ms
          brclr   keyboard,$04,getcE
          jmp     scan_kF
getcE     ldaa    #$45                ; get the ASCII code of E
          rts
db_keyF   jsr     delay10ms
          brclr   keyboard,$08,getcF
          jmp     scan_r0
getcF     ldaa    #$46                ; get the ASCII code of F
          rts
```

```
delay10ms   movb    #$90,TSCR1          ; enable TCNT & fast flags clear
            movb    #$06,TSCR2          ; configure prescale factor to 64
            movb    #$01,TIOS           ; enable OC0
            ldd     TCNT
            addd    #3750               ; start an output compare operation
            std     TC0                 ; with 10 ms time delay
wait_lp2    brclr   TFLG1,$01,wait_lp2
            rts
```

# Next…

- Interfacing with LCD